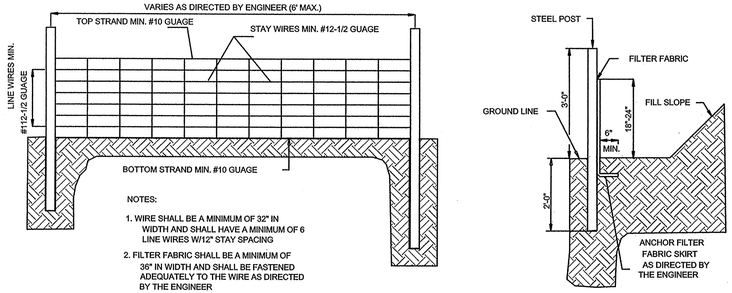

NOTES:

1. WIRE SHALL BE A MINIMUM OF 32" IN WIDTH AND SHALL HAVE A MINIMUM OF 6 LINE WIRES W/12" STAY SPACING
2. FILTER FABRIC SHALL BE A MINIMUM OF 36" IN WIDTH AND SHALL BE FASTENED ADEQUATELY TO THE WIRE AS DIRECTED BY THE ENGINEER
3. STEEL POST SHALL BE 5' 0" IN HEIGHT AND BE OF SELF FASTENER ANGLE STEEL TYPE

GUIDELINES FOR TEMPORARY SILT FENCE DETAIL

NOT TO SCALE

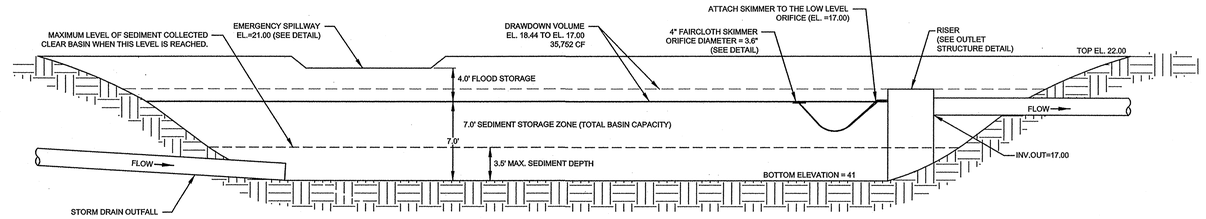

SEDIMENT BASIN DETAIL

NOT TO SCALE

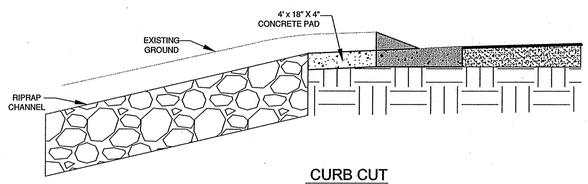

CURB CUT

NOT TO SCALE

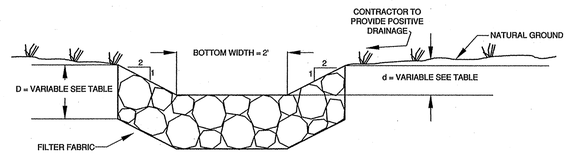

CONSTRUCTION TABLE

RR#1	D = 12"	d = 12"	CLASS B RIPRAP
RR#2	D = 12"	d = 12"	CLASS B RIPRAP

NOTES:

1. UNDERCUT CHANNEL TO DEPTH "D" AND FILL WITH CLASS B OR CLASS 1 RIPRAP AS SHOWN IN TABLE.
2. RIPRAP SHALL BE PLACED ON THE FABRIC IN A WAY SO AS NOT TO TEAR THE FABRIC.

RIPRAP CHANNEL

NOT TO SCALE

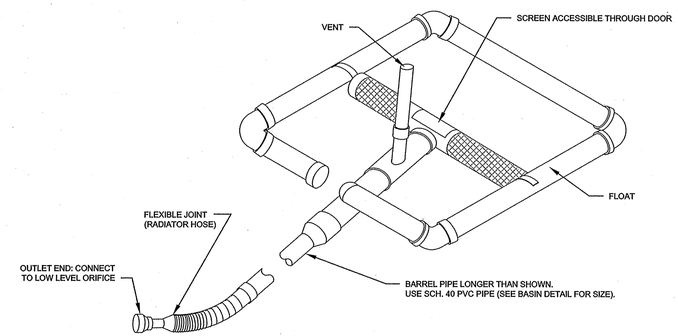

FAIRCLOTH SKIMMER DETAIL

NOT TO SCALE

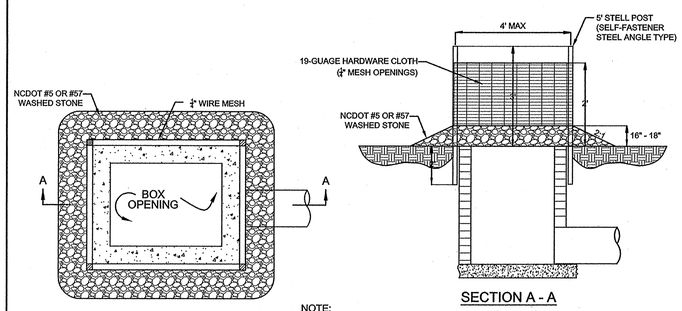

NOTE:
FOR CURB INLETS AND DROP INLETS

INLET PROTECTION

NOT TO SCALE

SECTION A - A

NOTES:

1. VIGOROUS STAND OF PERMANENT GRASS COVER SHALL BE ESTABLISHED AS SOON AS POSSIBLE ALONG THE BANKS OF DITCHES AND DISTURBED AREAS. WHERE DITCH BANKS CANNOT BE ADEQUATELY STABILIZED WITH VEGETATION, AN ARTIFICIAL LINER SUCH AS RIP-RAP SHALL BE USED TO PROTECT BANKS.
2. FOR VEGETATED SWALES, EXCELSIOR MATTING OR OTHER EFFECTIVE CHANNEL LINING MATERIAL SHALL BE USED.

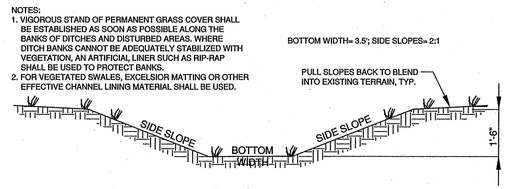

VEGETATED GRASS SWALE

NOT TO SCALE

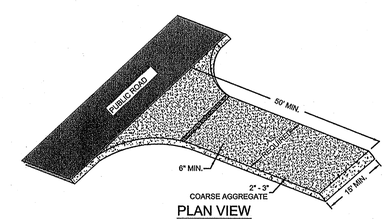

PLAN VIEW

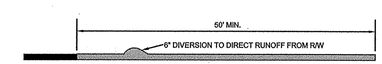

SECTION VIEW

TEMPORARY CONSTRUCTION ENTRANCE

NOT TO SCALE

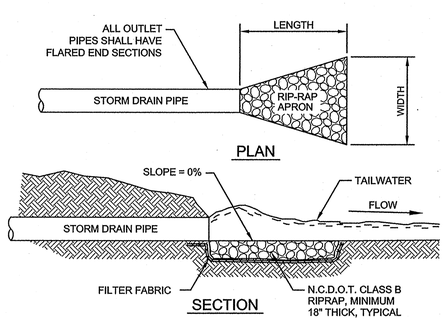

PLAN

SECTION

RIP-RAP SCHEDULE

			UPSTREAM	DOWNSTREAM
#	PIPE DIA. (IN.)	LENGTH (FT.)	WIDTH (FT.)	WIDTH (FT.)
1	30	15	7.5	7.5
2	18	9	4.5	4.5
3	2 @ 15	6	6	6

RIP-RAP APRON

NOT TO SCALE

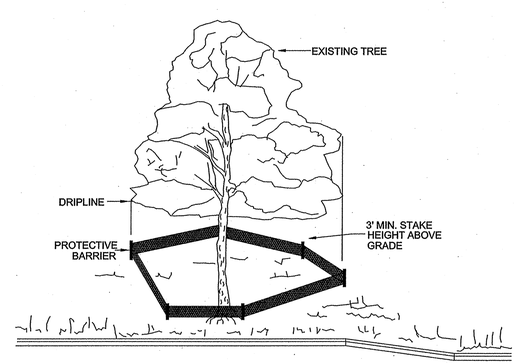

NOTE:
TREES TO BE SAVED WILL BE CLEARLY MARKED PRIOR TO CONSTRUCTION AND A PROTECTIVE BARRIER IS TO BE INSTALLED AT THE DRIPLINE.
DRIP LINE - THE AREA OF SOIL DIRECTLY BENEATH THE TREE EXTENDING OUT TO THE TIPS OF THE OUTERMOST BRANCHES.

BI-LINGUAL TREE PRESERVATION SIGNAGE TO BE PROVIDED PER CITY CODE

METHOD OF TREE PROTECTION DURING CONSTRUCTION
SD 15-08

NOT TO SCALE

For each open utility cut of City streets, a $325 permit shall be required from the City prior to occupancy and/or project acceptance.

Approved Construction Plan

	Name	Date
Planning		2-17-15
Traffic		2/17/15
Fire		2-18-15

CITY OF WILMINGTON NORTH CAROLINA
Public Services • Engineering Division
APPROVED STORMWATER MANAGEMENT PLAN
Date: 2/17/15 Permit # 2015003
Signed:

NCDENR PWSS WATER PERMIT #: _____
WATER CAPACITY: _____ GPD
DWQ SEWER PERMIT #: _____
SEWER CAPACITY: _____ GPD
SEWER SHED # AND PLANT: _____
SEWER TO FLOW THROUGH NEI: YES or NO (CIRCLE ONE)

FINAL DESIGN - NOT RELEASED FOR CONSTRUCTION

REVISIONS:

ADD RIPRAP CHANNEL DETAIL	11/07/14
REVISE SKIMMER DETAILS	12/9/14
PER CITY STORMWATER COMMENTS	12/16/14

CLIENT INFORMATION:

LOT 2 DEVELOPMENT
1015 ASHES DR., SUITE 202
WILMINGTON, NC 28405

PARAMOUNTE ENGINEERING, INC.
WILMINGTON, NC 5911 Oleander Drive, Suite 201 FAYETTEVILLE, NC
Wilmington, North Carolina 28403
(910) 791-6707 (O) (910) 791-6760 (F)
NC License #: C-2846

DETAILS

MELTON OAKS SUBDIVISION
WILMINGTON
NORTH CAROLINA

PROJECT STATUS
CONCEPTUAL LAYOUT:
PRELIMINARY LAYOUT:
FINAL DESIGN:
RELEASED FOR CONST:

DRAWING INFORMATION

DATE:	10/21/14
SCALE:	N/A
DESIGNED:	GLM
DRAWN:	GLM
CHECKED:	RPB

SEAL

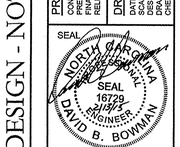

C-5.3

PEI JOB#: 14149.PE